Computer Architecture
Memory hierarchy

http://d3s.mff.cuni.cz/teaching/nswi143

Lubomír Bulej

bulej@d3s.mff.cuni.cz

CHARLES UNIVERSITY IN PRAGUE

faculty of mathematics and physics

The memory wall

- **CPU performance limited by memory performance**
  - CPU performance grows faster than memory performance
    - Simple operations take **tenths** of ns
    - Access to memory takes **tens** of ns
    - Pick two of three: memory as fast as the CPU, sufficient capacity, reasonable price

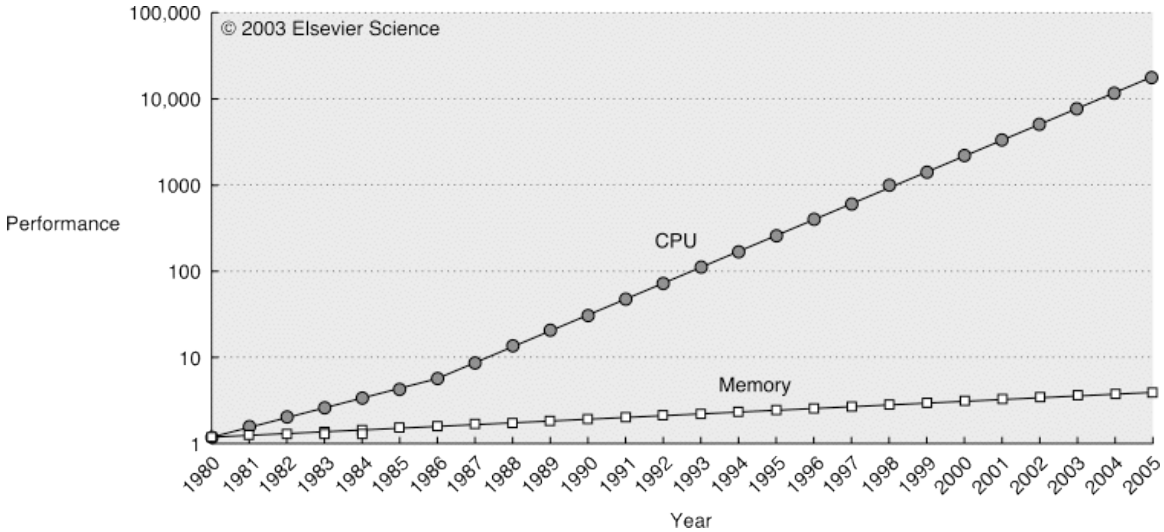

The memory wall (2)

- **Burks, Goldstine, von Neumann: *Preliminary discussion of the logical design of an electronic computing instrument* (1946)**
  - *„Ideally, one would desire an **infinitely large** memory capacity such that any particular word would be **immediately available** [...] We are forced to recognize the possibility of constructing a **hierarchy of memories**, each of which has a **greater capacity** than the preceding but which is **less quickly** accessible.“*

The memory wall (3)

- **Analogy: books and library**
  - Library
    - Lots of books, slow access (walk to the library)
    - Library size (finding the right book takes some time)
  - How to avoid high latency?
    - Borrow some of the books
      - Leave them on a desk or a shelf
        - Often-used books at hand (temporal locality)
        - Borrow more books on the same topic (spatial locality)
        - Think of what will be needed next *(pre-fetching)*
      - Both the desk and the self have limited capacity

The memory wall (4)

- **How to get over the memory wall?**
  - Exploit locality of memory accesses
    - Property of most real (useful) programs
      - Applies to both instructions and data
    - **Temporal locality**
      - Recently used data are likely to be accessed again in near future → keep such data in a small, but very fast memory
    - **Spatial locality**
      - Data near recently used data are likely to be accessed in near future → access data in larger blocks (that include data in close proximity)

Volatile memory

- **Static RAM**
  - Primary goal: speed
  - Secondary goal: capacity
    - 6 transistors per 1 bit, speed depends on area (latency for small capacities can be < 1 ns)
  - Combines well with other CPU logic
  - Contents stay in memory as long as it is powered
    - No need for periodic refresh

Static RAM

- **D-type flip-flop**
  - 1 bit, ~ 4 gates, ~ 9 transistors

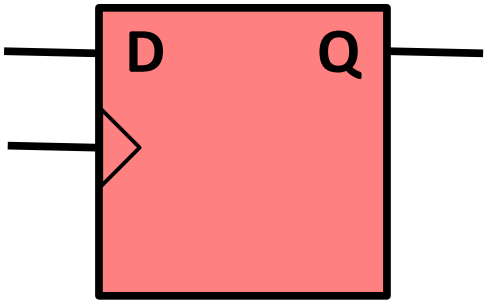

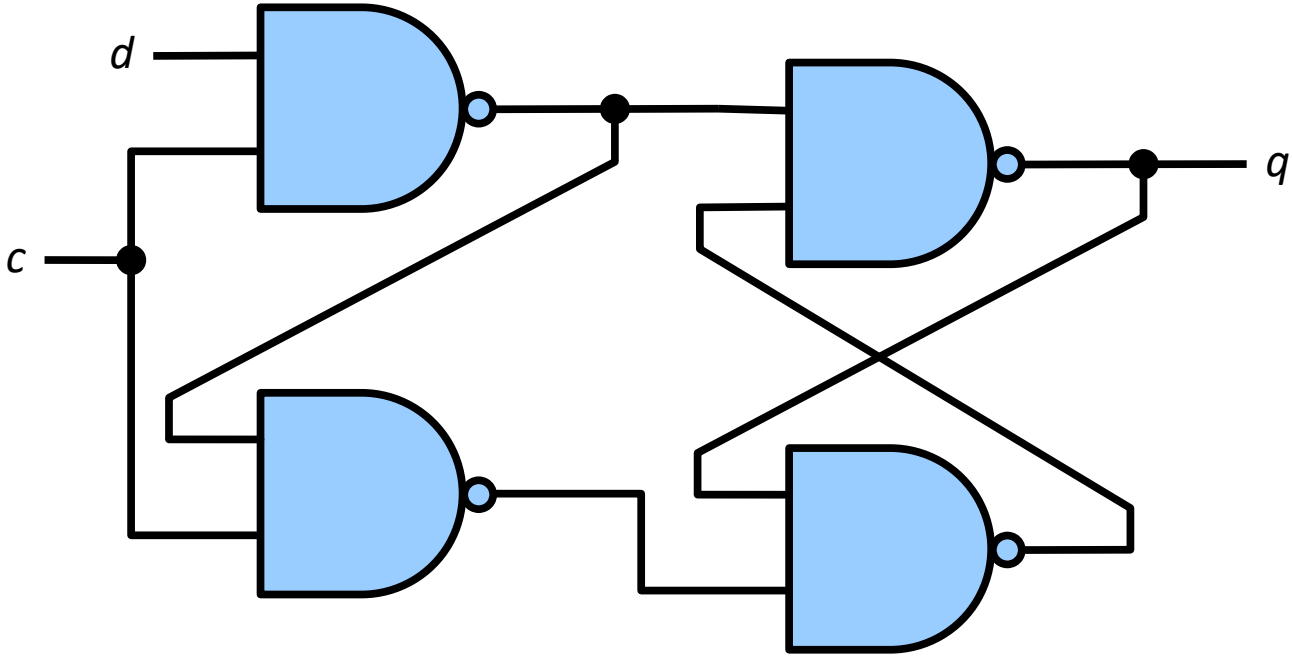

Static RAM cell

- **Pair of invertors + control transistors**
  - 6 transistors per 1-bit cell

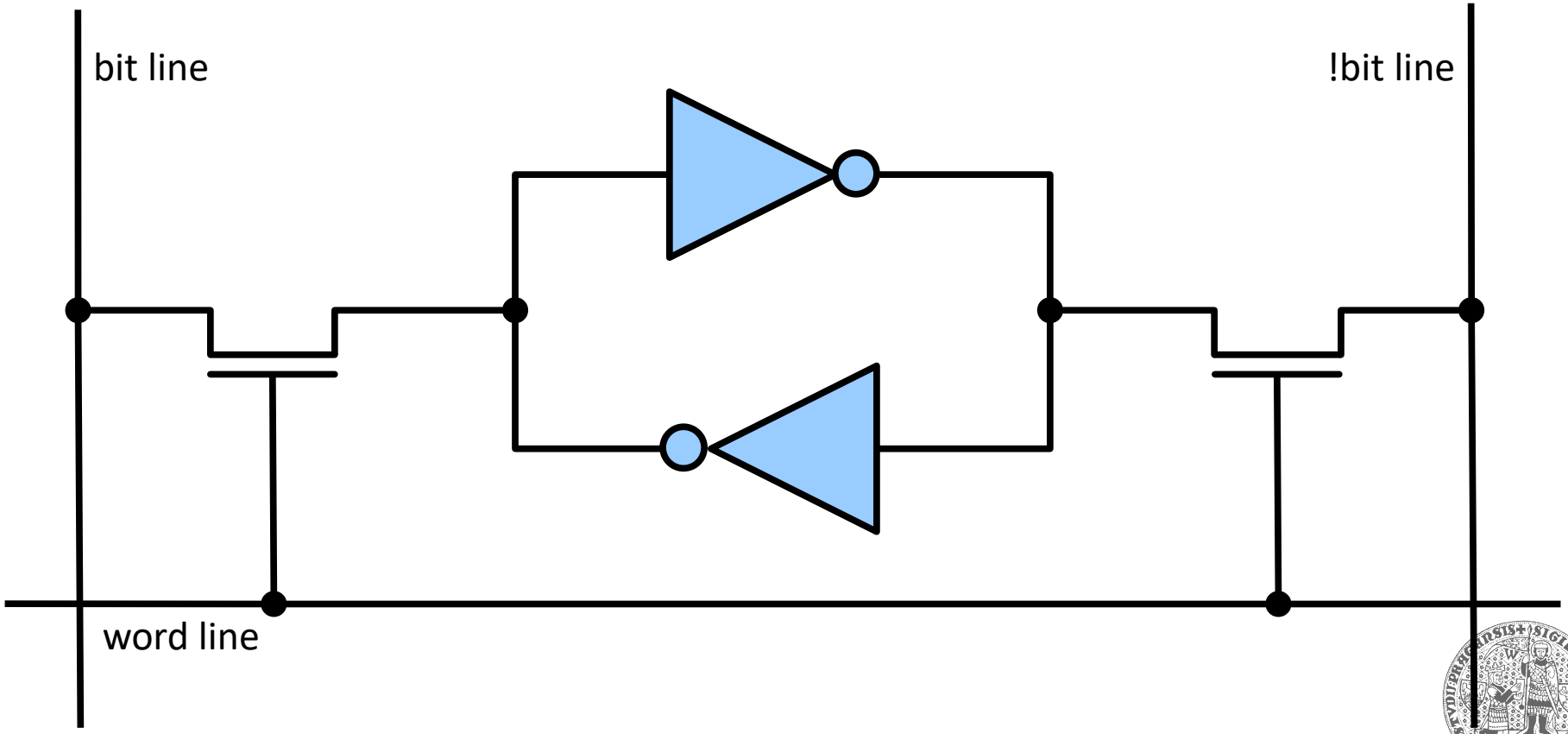

Static RAM in matrix arrangement

- ***M* × *N bits*: *M* rows of *N* bits**
  - Row selection
    - Binary to 1-hot
  - Access in two steps
    1. Row selection *(word lines)*
    2. Column read *(bit lines)*

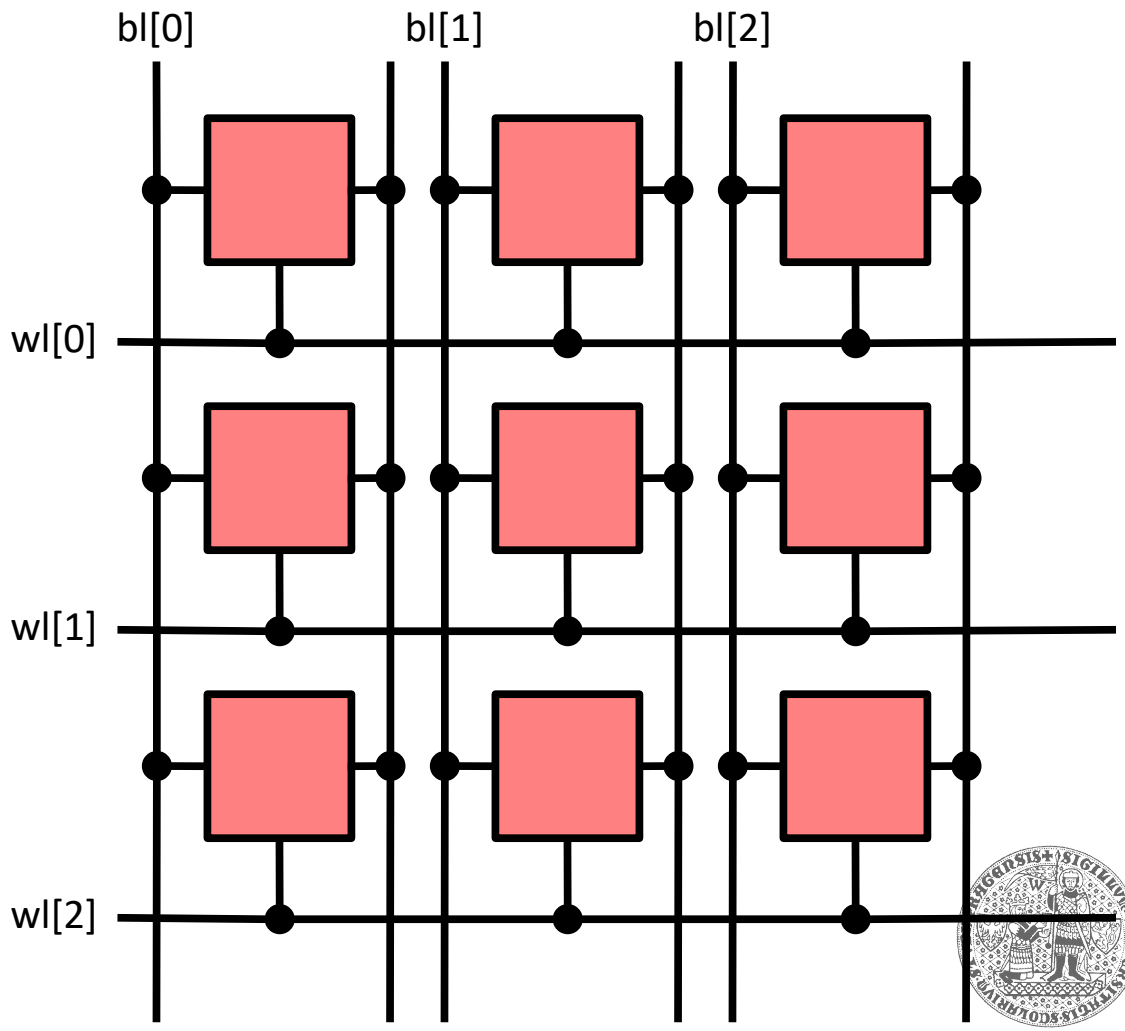

Static RAM (2)

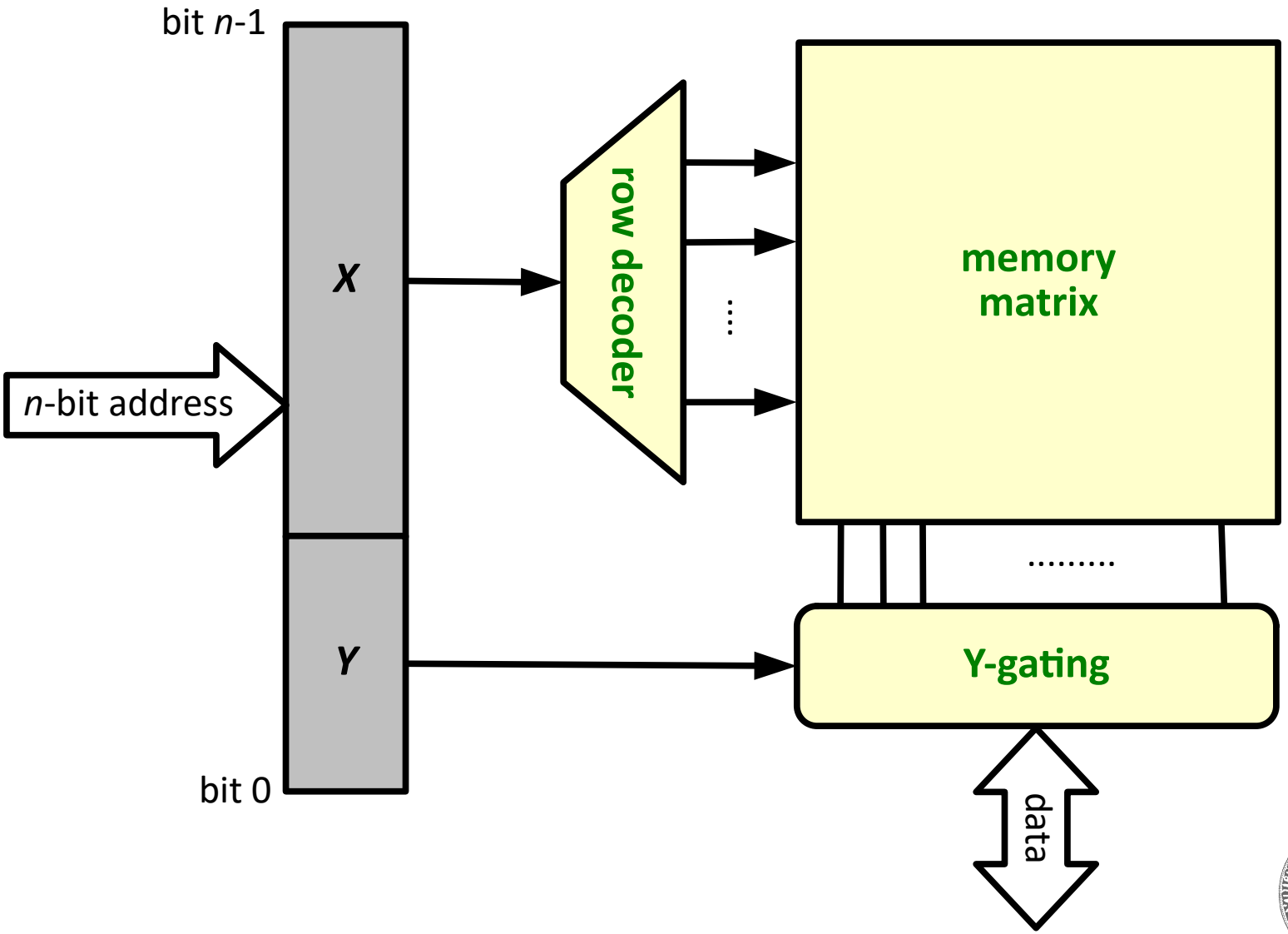
bit n-1
X
n-bit address
Y
bit 0
row decoder
memory matrix
Y-gating
data

Volatile memory (2)

- **Dynamic RAM**
  - Primary goal: density (cost per bit)
    - 1 transistor + 1 capacitor per 1 bit
    - High latency
      - 40 ns internally
      - 100 ns between circuits
  - Contents deteriorate over time
    - Needs periodic refresh (read data and write it back)
  - Difficult to combine with CPU logic
    - Different manufacturing process

Dynamic RAM cell

- **Capacitor + control transistor**
  - Information stored as electric charge
    - Capacitor charges/discharges itself due to losses and content of surrounding cells
  - Reading is destructive (value read is immediately written back)

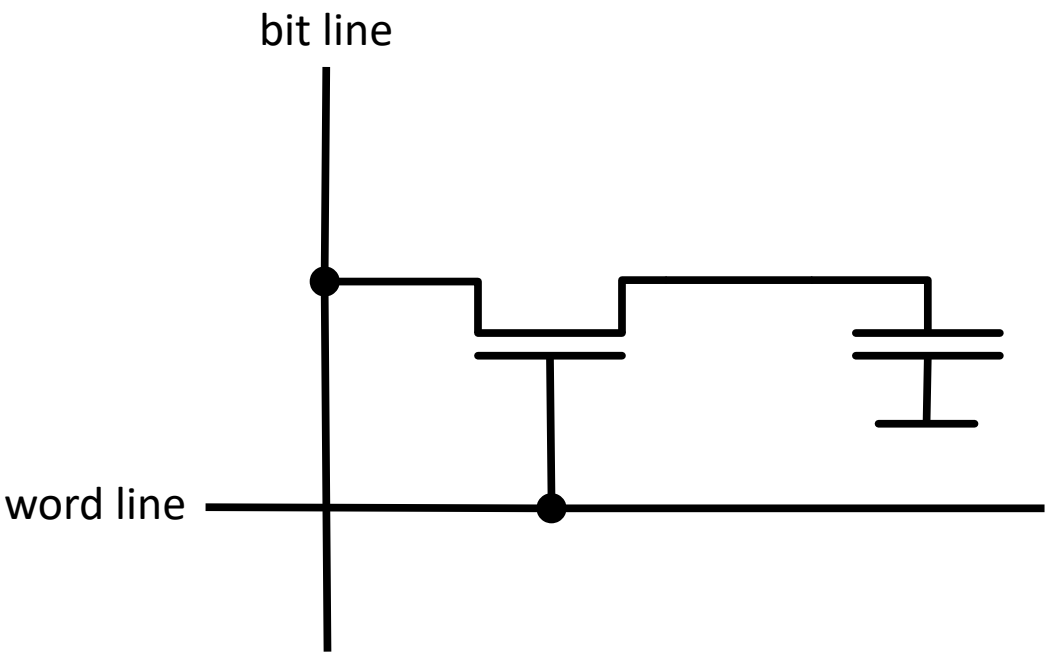

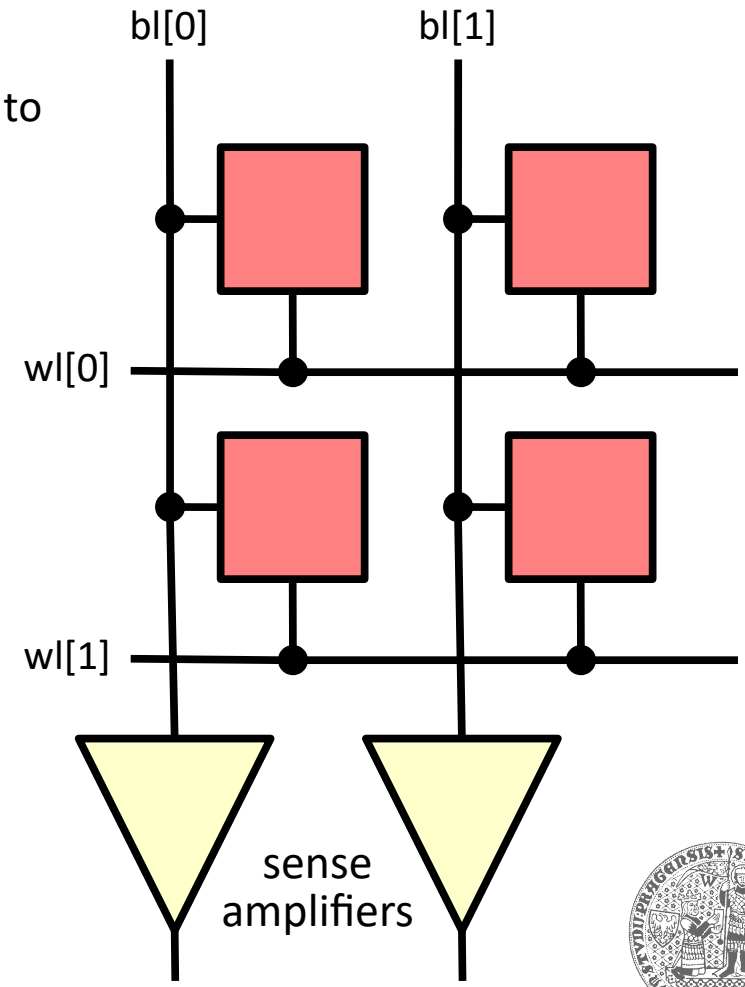

Dynamic RAM

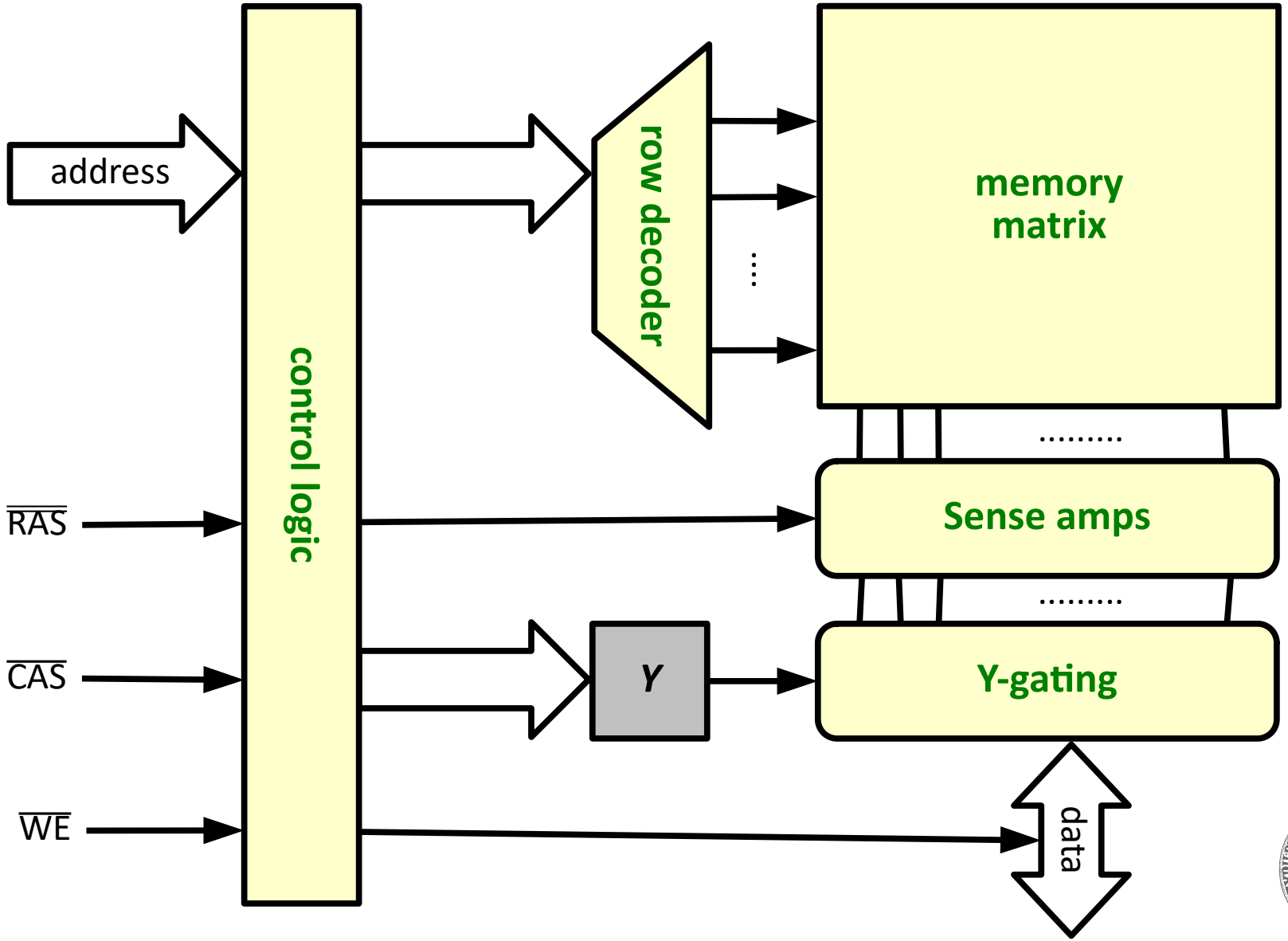
address
control logic
row decoder
memory matrix
RAS
Sense amps
CAS
Y
Y-gating
WE
data

Increasing DRAM performance

- **Observation**
  - Reading DRAM row takes the most time
  - Row contains more than just the requested word
  - Need to amortize the cost of reading a row
    - Use more words from last read row
    - Pipelining data output and selecting (reading) new row
      - The recently read row is stored in an output register, start reading another row while data is being transmitted from the data register to the CPU (via bus or other interconnects)

Exploiting locality of access

- **Hierarchy of memory components**
  - Higher tiers (closer to CPU)
    - Fast, small, expensive
  - Lower tiers (farther from CPU)
    - Slow, large, cheap
  - Mutually interconnected
    - Adds latency, limits bandwidth
  - Most frequently used data in M1
    - Second most frequently used data in M2, etc.
    - Need to deal with transfers between tiers
  - Optimize for average latency
    - $Lat_{avg} = Lat_{hit} + Lat_{miss} \times \%_{miss}$

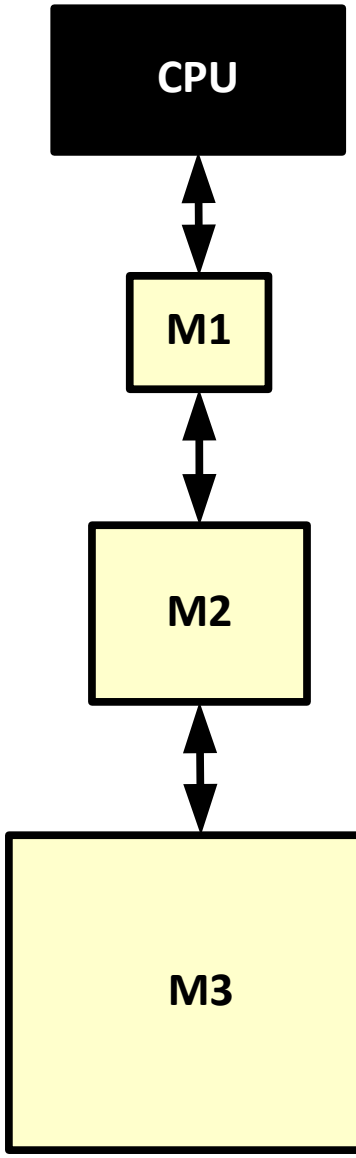

Hierarchy of memory components

- **M0: CPU registers**
  - Data for instructions
- **M1: Primary (level 1) cache**
  - Separate instruction/data cache
  - SRAM (kB)
- **M2: Secondary (level 2) cache**
  - Ideally on chip, certainly in package
  - SRAM (MB)
- **M3: Main memory**
  - SRAM (kB—MB, embedded devices)
  - DRAM (GB)
- **M4: Swap memory**
  - Files, swap space
  - HDD, flash (TB)

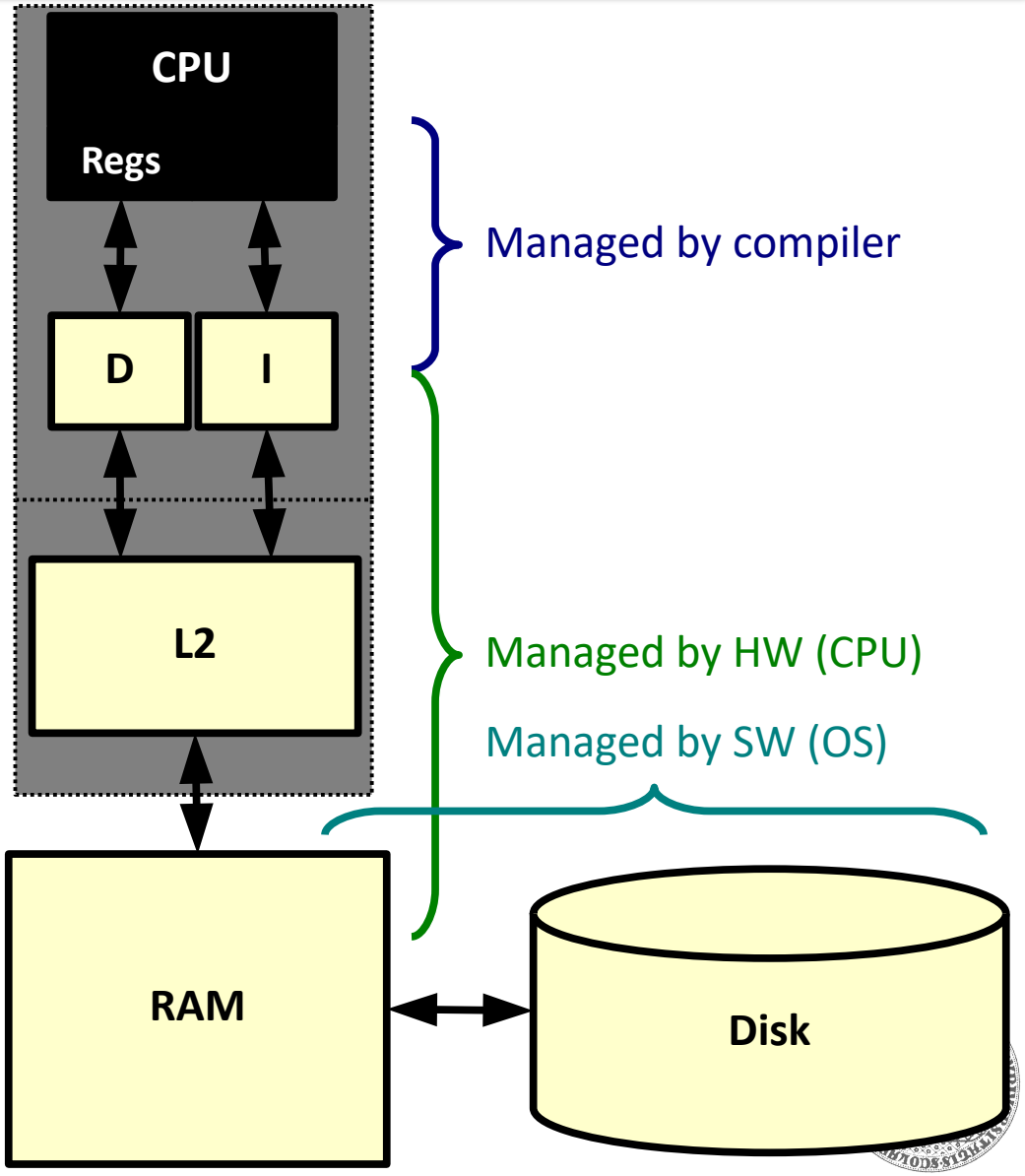

Hierarchy of memory components (2)

- **Back to the library analogy**
  - CPU register ↔ currently open page in a book
    - Only one page
  - Primary (level 1) cache ↔ books on a desk
    - Actively used, very quick access, small desk capacity
  - Secondary (level 2) cache ↔ books on a shelf
    - Actively used, relatively quick access, medium capacity
  - Main memory ↔ library
    - Almost all data, slow access, huge capacity
  - Swap memory ↔ inter-library borrowing
    - Very slow, very rare

Cache

- **Big and fast memory (an illusion)**
  - Data transfer between cache levels handled by hardware
    - Automatically finds missing data
      - *Cache controller*
    - Integrated on-chip SRAM
    - Software can provide hints
  - Cache organization (ABC)
    - **Associativity**, **Block** size, **Capacity**
    - 3C model of cache misses

Mapping memory directly to cache

- **Basic structure**
  - An array of *cache lines*
    - E.g., 1024 cache lines, 64 B each → 64 KB
  - „Hardware hash table“ based on address
    - Example configuration for 32bit addresses
      - 64-byte blocks → the lowest 6 bits addresses the byte in a block *(offset bits)*
      - 1024 blocks → next 10 bits represents block number *(index bits)*
      - *What about the remaining 16 bits?*

Mapping memory directly to cache (2)

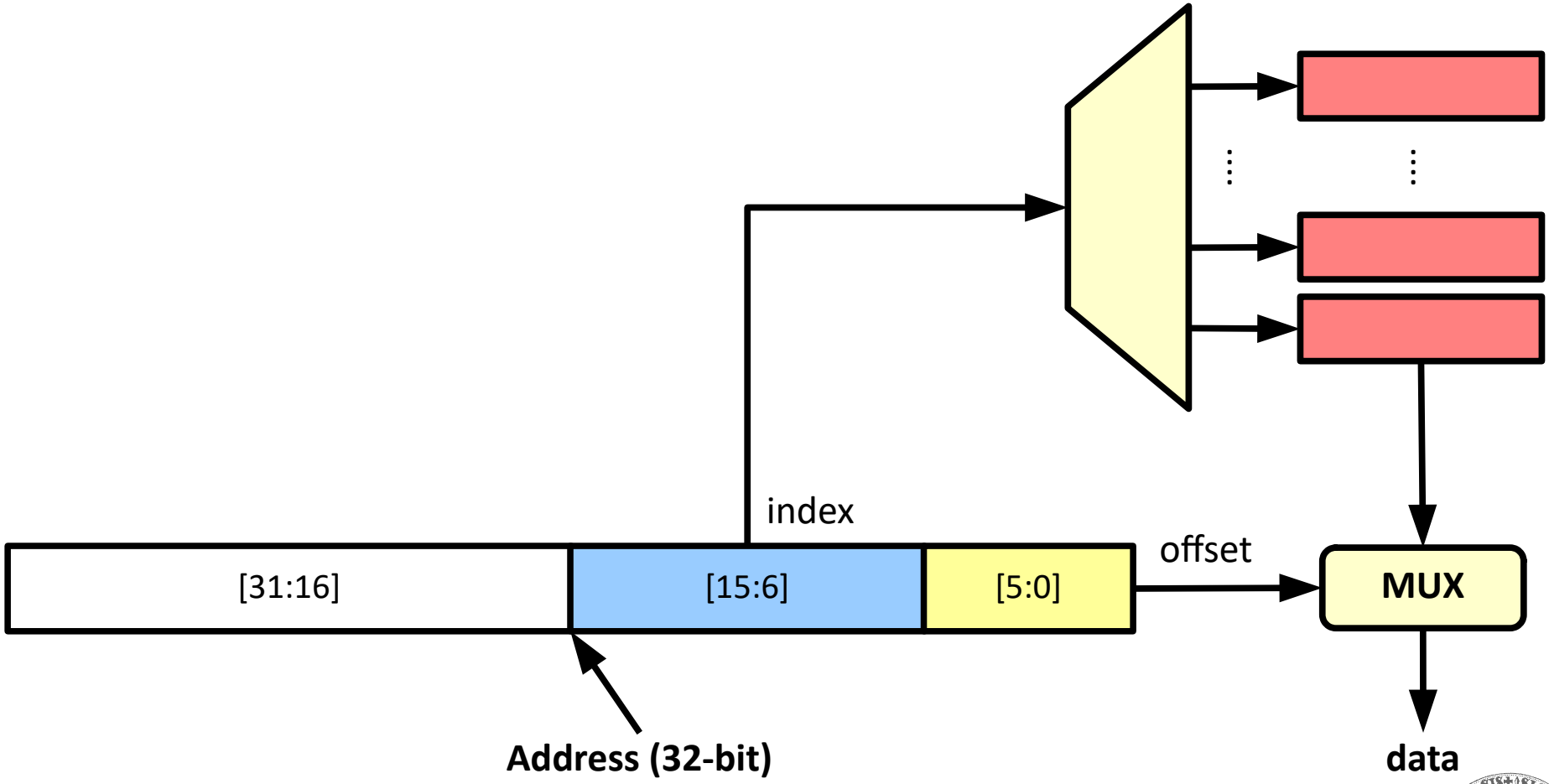

Mapping memory directly to cache (3)

- **Finding the correct data**
  - Each cache line can contain one of 2^{16} different blocks of main memory with identical cache line number (in our example)
    - "Hash function"
    - Detect the matching data
      - Flag indicating cache line validity *(valid bit)*
      - Tag with the remaining bits of the address *(tag bits)*
  - **Algorithm**
    1. Read cache line determined by the index
    2. If the *valid bit* is set and the *tag* matches the bits in the rest of the address, then it is a ***cache hit***
    3. Otherwise ***cache miss***

Mapping memory directly to cache (4)

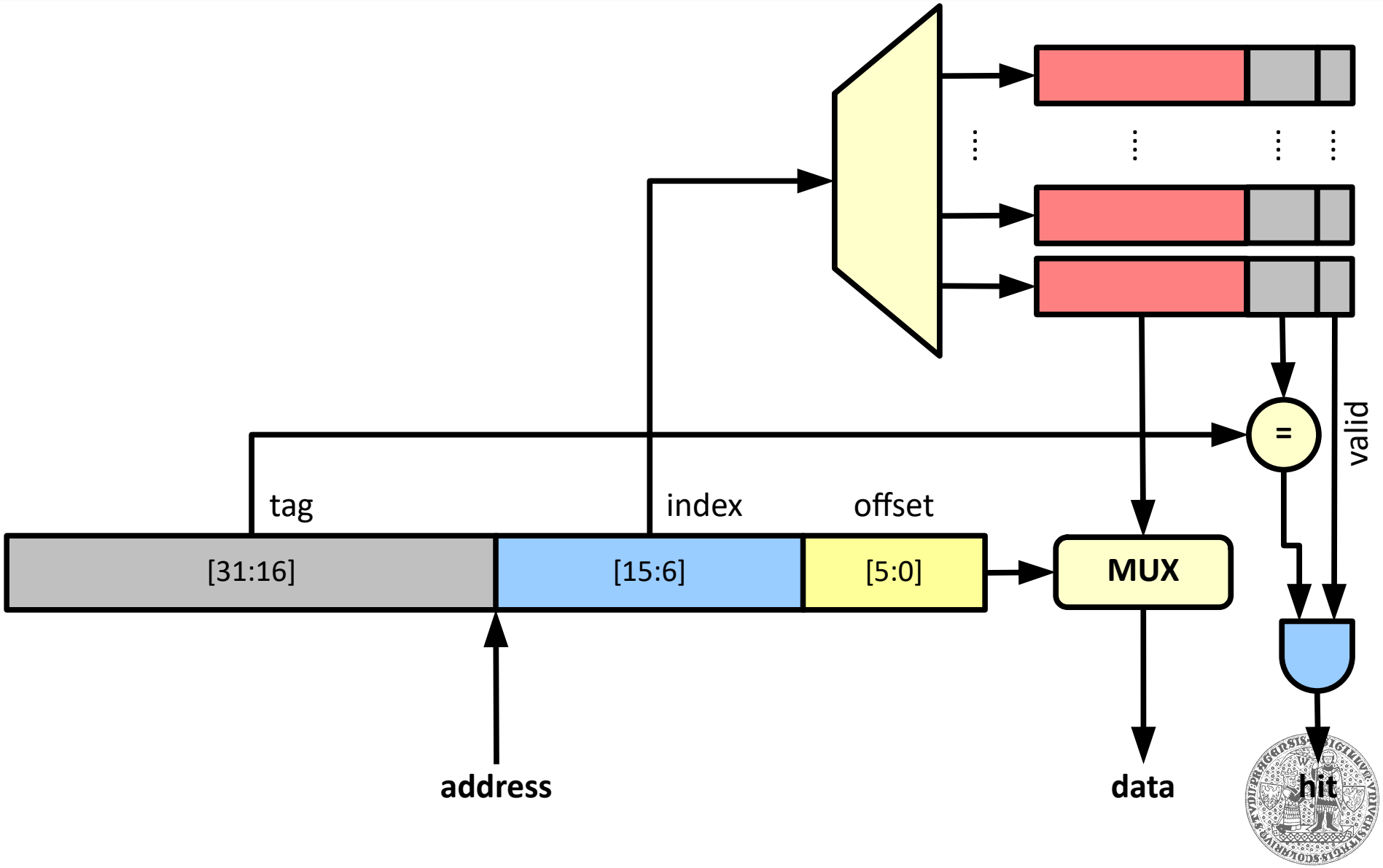

Metadata overhead (tags, valid bits)

- **64 KB cache with 1024 cache lines of 64B each**
  - For 32-bit addresses
    - (16 bits per tag + 1 valid bit) × 1024 cache lines ~ 2,1 KB
    - Overhead 3,3 %
  - For 64-bit addresses
    - (48 bits per tag + 1 valid bit) × 1024 cache lines ~ 6,1 KB
    - Overhead 9,6 %

Handling a cache miss

- **Read data into cache**
  - Cache controller
    - Sequential circuit/state machine
    - Requests data from the next level of memory hierarchy using the memory address that caused the cache miss
    - Writes data, tag, and valid bit into cache line
  - Cache misses cause pipeline stalls
    - Stall logic controlled by the *cache miss* signal
    - Scalar pipeline stalls (situation similar to data hazard)
    - Superscalar pipeline can still execute other instructions
      - Cache operates independently from the data path
      - CPU supports multiple in-flight memory operations

Cache performance

- **Cache operations**
  - Cache access (load/store from/to memory)
  - Cache hit (data found in cache and passed to data path)
  - Cache miss (data not found, trigger load from next level)
  - Cache fill (loading data into cache)
- **Metrics characterizing cache performance**
  - $\%_{miss}$: fraction of cache misses from all cache accesses *(miss rate)*
  - t_{hit}: time needed to access cache (and to get data on cache hit)
  - t_{miss}: time needed to read data into cache
- **Goal: minimize average access time**
  - $t_{avg} = t_{hit} + t_{miss} \times \%_{miss}$

Reducing miss rate

- **Obvious approach: increase capacity**
  - Miss rate decreases monotonically
    - Law of diminishing returns
  - t_{hit} increases with square root of capacity

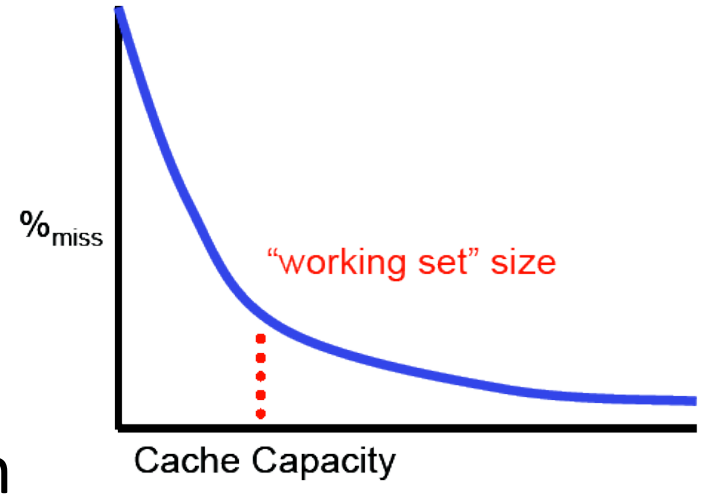

[1]

- **Less obvious approach**
  - Change cache organization
    - Capacity is restricted by transistor budget
    - Try to get the most out of available resources

Cache organization: block size

- **Increasing block (cache line) size**
  - Attempt to exploit spatial locality
  - Decrease the number of cache lines
    - Moves the split between index and offset bits of an address
    - The number of tag bits does not change
  - **Consequences**
    - Reduces miss rate (to a degree)
    - Less tag overhead (smaller number of cache lines)
    - More potentially useless data transfers
    - Premature replacement of potentially useful data

Block (cache line) size vs miss rate

- ***Spatial prefetching***
  - Changes miss/miss to miss/hit for blocks with consecutive addresses (stored in consecutive blocks)
- ***Interference***
  - Changes hit to miss for blocks with non-consecutive addresses stored in consecutive cache blocks
    - Prevents having both blocks in the cache at the same time
- **Always: mix of both effects**
  - Spatial prefetching dominates initially, interference kicks in later
    - Limit case: single (huge) cache line
  - Common (block) cache line size: 16 – 128 B

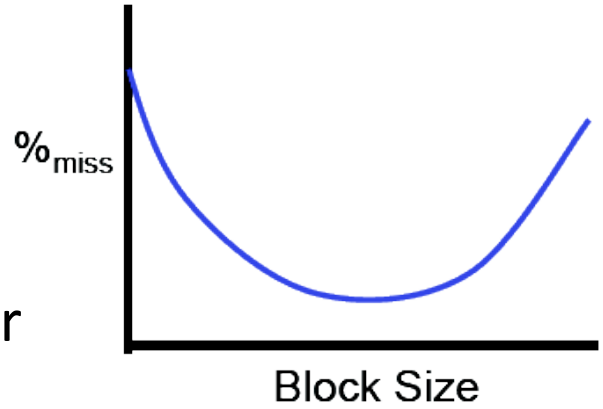

[1]

Block (cache line) size vs fill latency

- **In principle**
  - Reading long cache lines should take longer
- **In practice**
  - t_{miss} does not change too much for isolated misses
    - *Critical Word First / Early Restart*
      - Cache controller and memory cooperate to first transmit the word actually requested by the CPU (to minimize pipeline delays)
      - The rest of the cache line contents follow
  - t_{miss} increases when misses occur in batches
    - Cannot read/transmit/fill multiple lines at the same time
    - Limited bandwidth between memory and the CPU
    - Delays of queued requests accumulate

Caches with associative mapping

- **Set associativity**
  - **Goal**: reduce conflicts between memory blocks mapped to the same cache line
    - A block of memory can be stored in any block from a set of cache lines
  - Groups of blocks (cache lines) = sets
  - Cache line in a set = way
    - *Example: 2-way set-associative cache*
    - Limit cases
      - 1 way: directly mapped cache
      - 1 set: fully-associative cache
  - Increases t_{hit}
    - Selecting data from cache lines in the set

Caches with associative mapping (2)

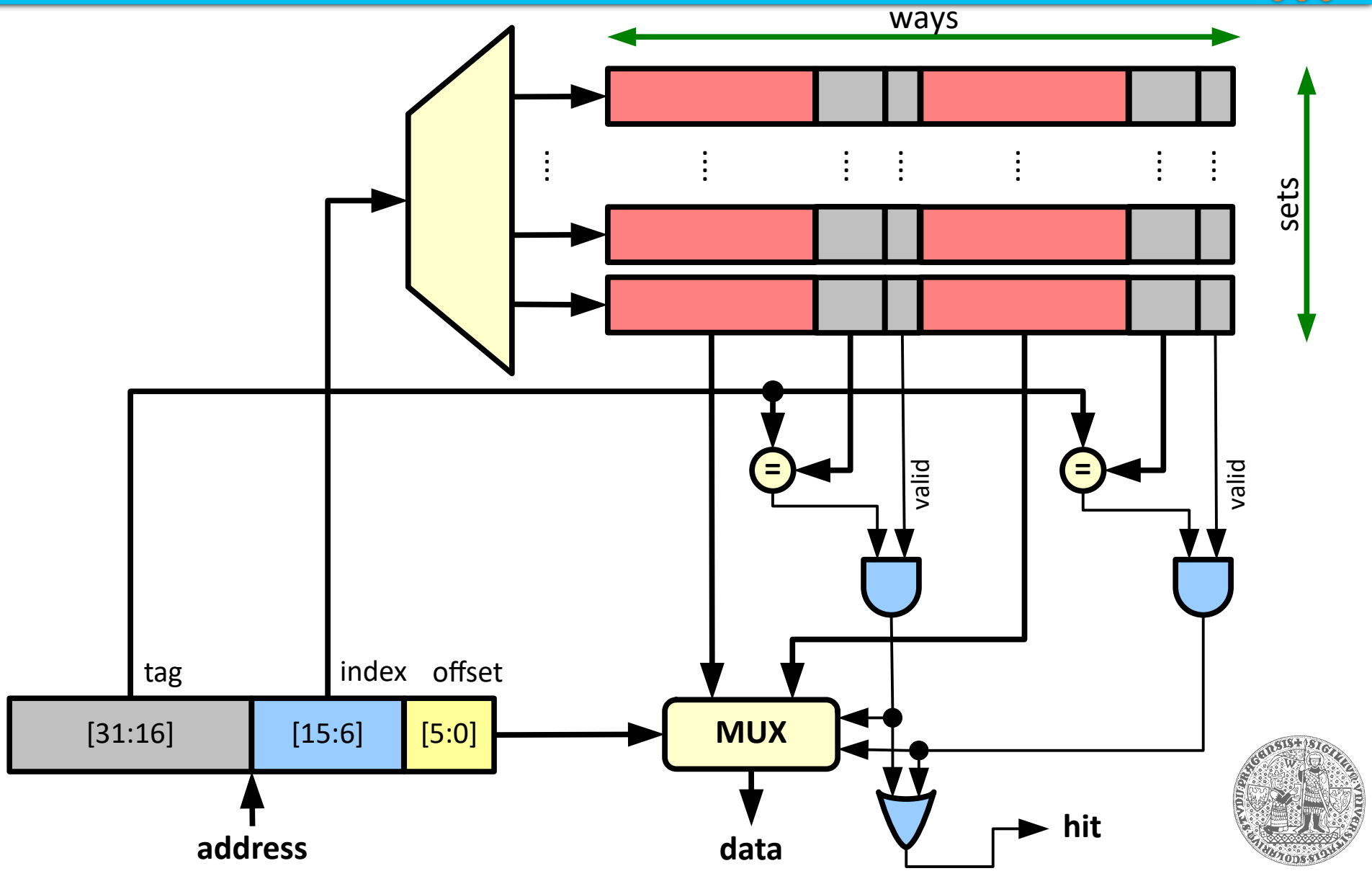

Caches with associative mapping (3)

- **Looking for data**
  1. Use index bits of the address to select a candidate set of cache lines where to look for data
  2. **In parallel:** fetch data and tags from all ways
  3. **In parallel:** compare all tags with address tag bits
  - Impact on tag/index bit split (constant capacity)
    - More ways → less sets → less index bits
    - More tag bits

Cache associativity vs miss rate

- **Increasing associativity**
  - Reduces miss rate
    - Law of diminishing returns
  - Increases t_{hit}

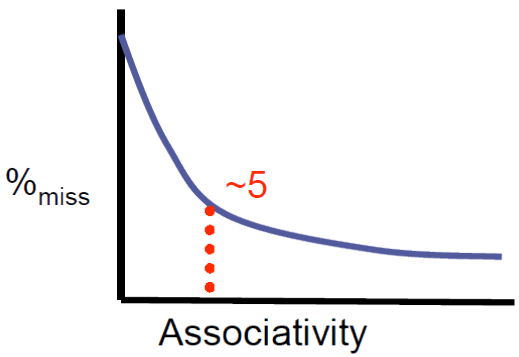

[1]

  - Note: *n*-way associative cache where *n* is not a power of 2 is feasible
    - Not commonly found though
    - Cache line (block) size should be power of 2
    - Number of sets should be power of 2
      - Simplifies addressing (simply cut off address bits)

Fully associative cache

- **Set-associative with 1 set (number of ways = number of blocks)**
  - A block of memory can be in any block of cache (cache line)
  - All bits of address bits (except offset bits) represent a tag
  - Associative memory
    - Contents addressed by a key (key = tag)
    - Analogy: key/value pairs in a hash map

Fully associative cache (2)

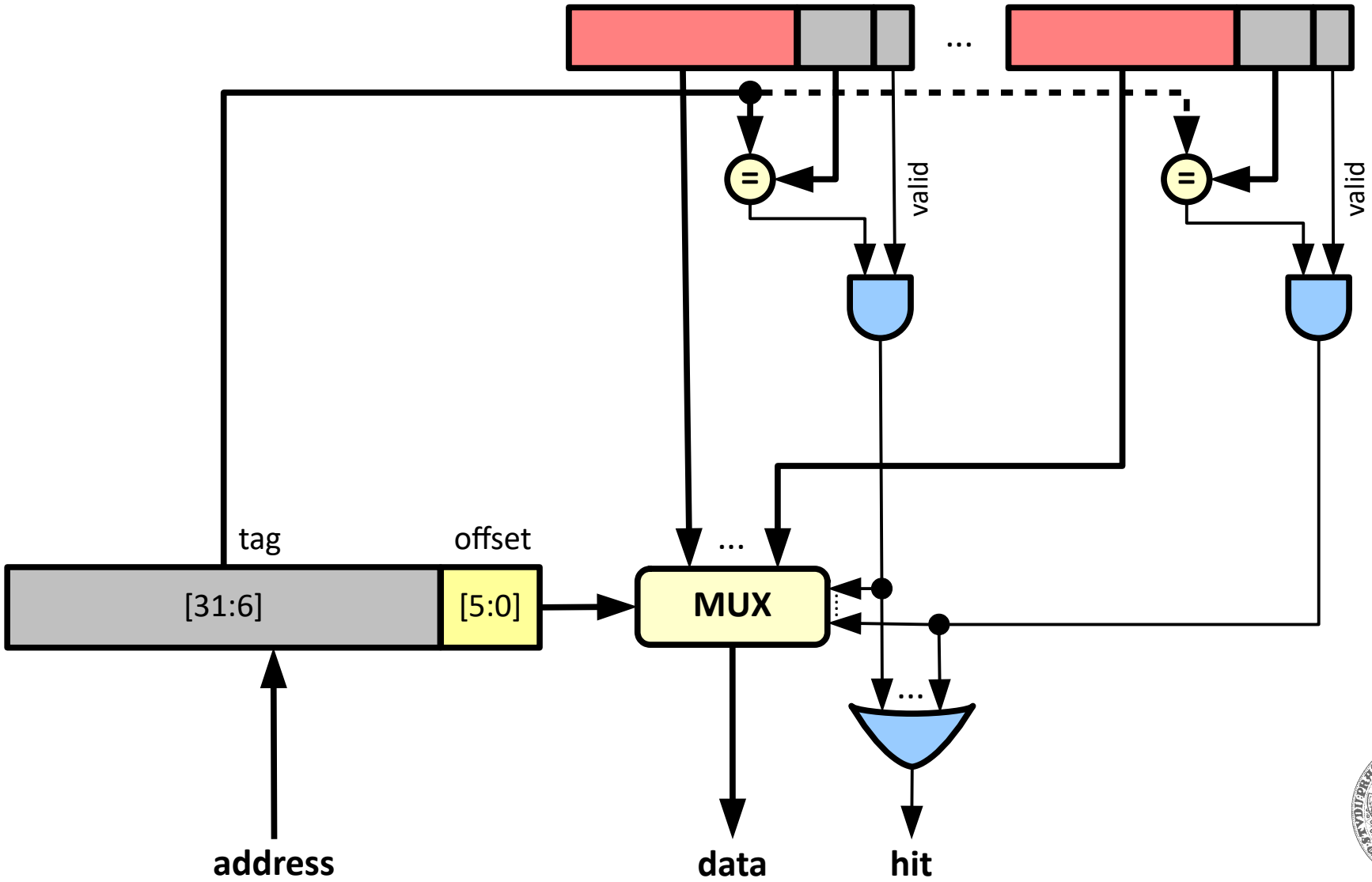

3C model: understanding cache misses

- **Cache miss classification**
  - ***Compulsory (cold) miss***
    - „Ain't seen no such address before"
    - *Cache miss would occur even in infinitely large cache*
  - ***Capacity miss***
    - Caused by insufficient cache capacity
      - Repeated access to a block of memory separated by at least *N* accesses to *N* other blocks (where *N* is number of blocks in cache)
      - The working set is simply too large
    - *Cache miss would occur even in fully-associative cache*
  - ***Conflict miss***
    - All the (remaining) misses that are not cold/capacity
    - Caused by low cache associativity

Miss rate: ABC

- **Consequences of the 3C model**
  - Increasing associativity does not help if there are no conflict misses
  - ***A**ssociativity*
    - Reduces the number of conflict misses
    - Increases t_{hit}
  - ***B**lock (cache line) size*
    - Increases the number of conflict/capacity misses (less cache lines)
    - Reduces number of cold/capacity misses (spatial locality)
    - Does not (mostly) influence t_{hit}
  - ***C**apacity*
    - Reduces the number of capacity misses
    - Increases t_{hit}

Reading data from cache

- **Tag and (all) data can be read in parallel**
  - If a tag does not match, data is not used (cache miss)
    - Issues a fill request to lower layer of the memory hierarchy
- **Read miss: where to put data from lower layer?**
  - Replace contents of “some” cache line with new data
    - The original content is evicted
  - Direct-mapped cache
    - The cache line to evict is determined by address index bits
  - (Set) associative cache
    - All ways within a set are potential candidates, need to pick a “victim”
    - Ideally: don’t throw away data that will be needed soon
      - Random
      - LRU *(Least Recently Used)*: optimal wrt. temporal locality
      - NMRU *(Not Most Recently Used)*: approximates LRU

Writing data to cache

- **Write hit**
  - Data can be written to the cache line
    - If writing to cache only, the data in cache and main memory will be inconsistent
  - Write through
    - Data always stored both to cache AND lower layer/memory on store operation
    - Problem: memory operations (a thus store instructions) take too long
    - Solution: write data to cache and a **write buffer** (output towards lower layer)
      - CPU only needs to wait if the write buffer is full (How can that happen?)
      - Write buffer needs to be checked when looking for data in cache
  - Write-back
    - Data only stored to cache on store operation
      - Requires a „dirty bit“ to indicate if a cache line has been modified wrt. lower layer
    - Modified (dirty) cache line only written to memory when evicted
    - Improves performance when a program issues stores as fast or faster than the memory can handle
    - More difficult to implement

Writing data to cache (2)

- **Write miss in a write-through cache**
  - Reading tag/writing data can be done **at the same time**
    - Overwriting wrong data is not a big problem, the right data is in memory
  - Write allocate
    - Fill cache with data from lower layer first
    - Continue as if it was write hit: replace part of cache line with new data
    - Can prevent cache misses on future accesses (locality)
      - Not always the case
    - Requires sufficient memory bandwidth
  - Write no-allocate
    - Data written only to the lower layer
    - Eliminates fill from lower layer on write miss
      - Suitable for “pass though” data that the CPU only touches once
      - Zeroing a page, writing block of data to disk, sending a packet over network
  - Processors often allow setting a write strategy for individual pages

Writing data to cache (3)

- **Write miss in a write-back cache**
  - Cannot always read tag and write data at the same time
    - Modified cache line to be evicted first needs to be written to lower level of the hierarchy
  - Write requires two steps...
    - Check for hit/miss and then write
  - … or using a **store buffer** (input from data path)
    - Check hit/miss while putting data into buffer
    - Data written from store buffer to cache on write hit
  - Writing into a modified cache line (on replacement)
    - Data moved from cache line to **write-back/victim buffer**, stored to lower layer/memory later (asynchronously)
    - When looking for data in cache, the write-back buffer needs to be consulted too

Multi-level caches (1)

- **Goal: reduce cache miss penalty**
  - 1-level cache:
    Total CPI = 1.0 + Memory stall cycles per instruction
    - 4 GHz processor, memory access 100 ns (400 cycles), 2% cache misses:
      Total CPI = 1.0 + 2% x 400 = 9
  - 2-level cache:
    Total CPI = 1.0 + Primary stalls per instruction + Secondary stalls per instruction
    - Hit/miss latency 5 ns (20 cycles), reduces miss rate to 0.5%:
      Total CPI = 1.0 + 2% x 20 + 0.5% x 400 = 3.4

Multi-level caches (2)

- **Different cache levels have different roles**
  - Allows optimizing for different criteria than with single-level cache
- **Primary cache (L1)**
  - **Minimize hit time**
  - Allows increasing clock rate or reducing number of pipeline stages
  - Typically smaller capacity, smaller cache lines (lower penalty for cache miss)
- **Secondary cache (L2)**
  - **Minimize miss rate**
  - Reduces penalty for accessing memory
  - Significantly larger capacity (access time not critical), larger cache lines, higher associativity (focus on reducing miss rate)

Do we need to know (about caches)?

- ***Quick Sort* vs. *Radix Sort***
  - LaMarca, Ladner (1996)
  - **O(*n*×log *n*)** vs. **O(*n*)**
  - Theory: nothing of interest

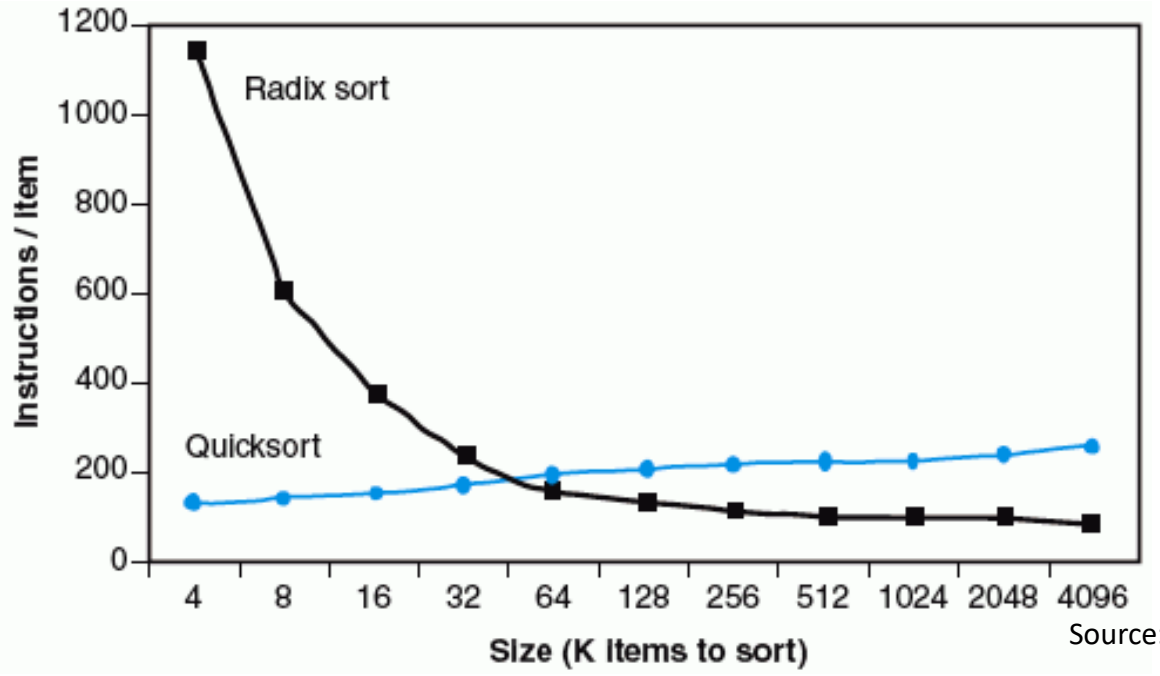

Source: P&H

Do we need to know (about caches)? (2)

- **Surprise: Quick Sort turned out to be faster for larger amounts of data ...**

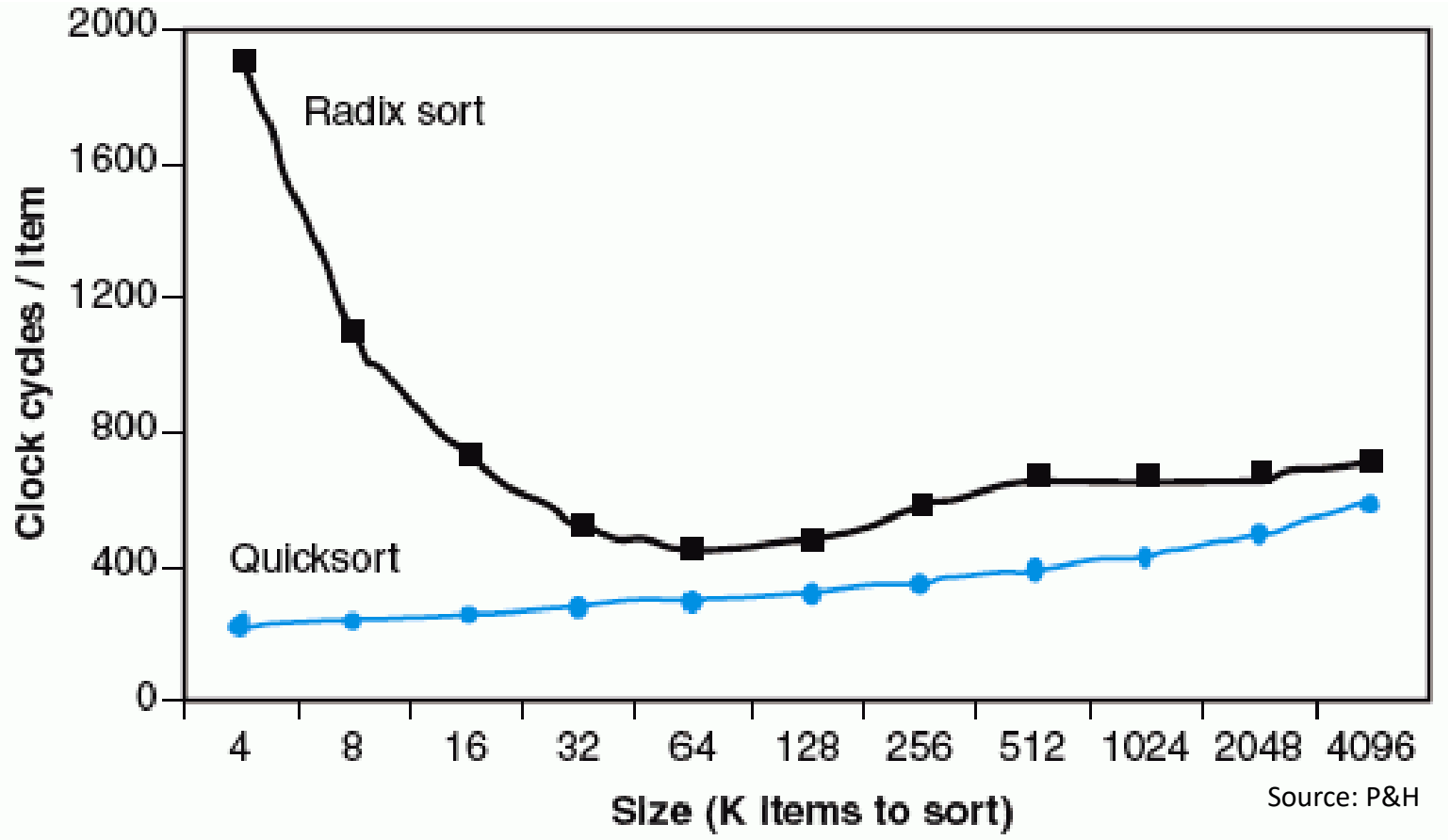

Source: P&H

Do we need to know (about caches)? (3)

- **Theory vs practice**
  - The **way** the *Radix Sort* implementation accessed data caused too many cache misses

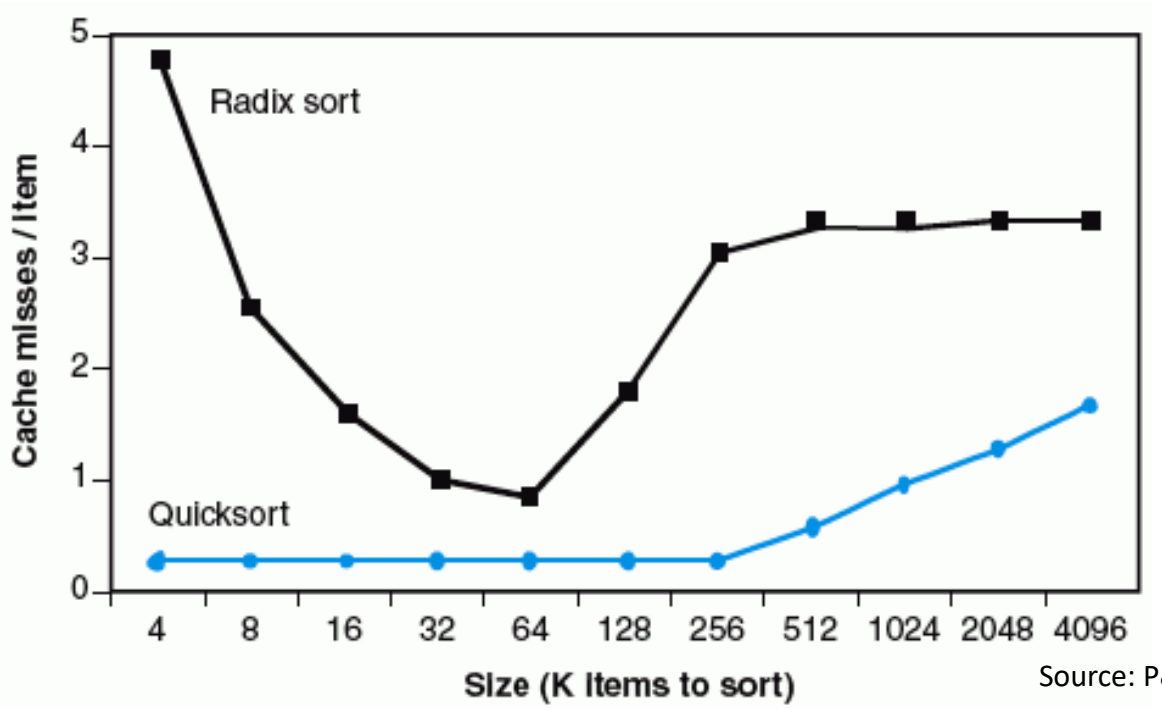

Source: P&H

Do we need to know (about caches)? (4)

- **Solution**
  - Modify *Radix Sort* implementation to first process data in a block of memory that is already in cache (cache line)

Memory dominates CPU performance

- **The memory wall**
  - CPU performance grows faster than memory performance
- **There is no ideal memory technology**
  - Fast, large, cheap – pick two out of three
- **Locality in accessing memory**
  - Temporal + spatial, found in real (useful) programs
- **Solution: hierarchy of memories**
  - Optimize **average time** to access memory
  - Different technologies in different levels
  - Transfer data between levels

Cache: an illusion of ideal memory

- **1-3 levels of fast memory between CPU and main memory**
  - SRAM, L1 capacity ~ 64KiB, L2/L3 capacity ~ 256KiB-16MiB
  - Transparent from programmer's (and CPU) perspective
    - CPU (data path) only requests data from cache
    - Data transfers between cache and memory handled by HW
  - Data stored in blocks (cache lines) corresponding to blocks of memory
    - tag – part of an address that disambiguates the mapping of memory blocks to cache blocks
- **3C model: cache miss classification**
  - Changing cache organization to eliminate cache misses
- **ABC: basic cache parameters**
  - Associativity, block (cache line) size, capacity

Memory hierarchy and parallelism

- ***Multiprocessor systems with shared memory***
  - Programs read and write to shared variables
    - Processors issue read/write requests for specific memory addresses
- ***Intuitive expectation***
  - Reading from a memory address always produces the last value written to that address by any other processor

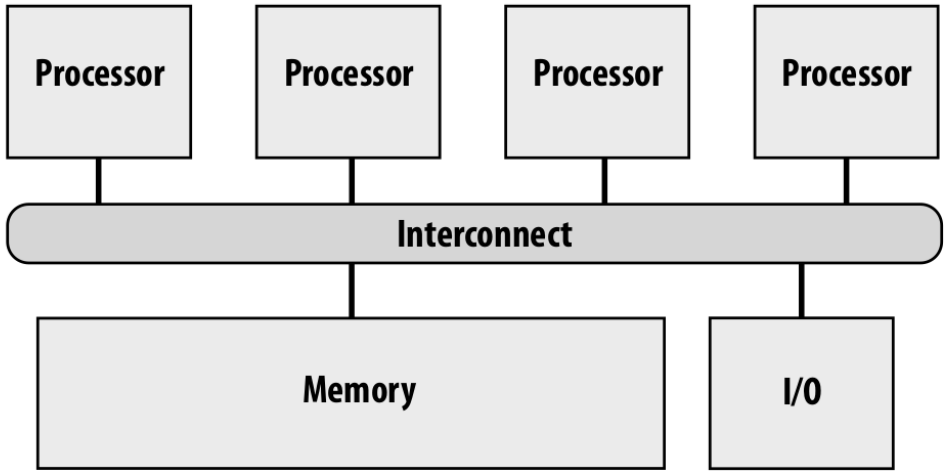

The problem with caches...

- ***Contents of memory replicated in local caches***
  - A necessity in modern processors
  - The (local) cache of different processors could potentially contain different value for the same memory location

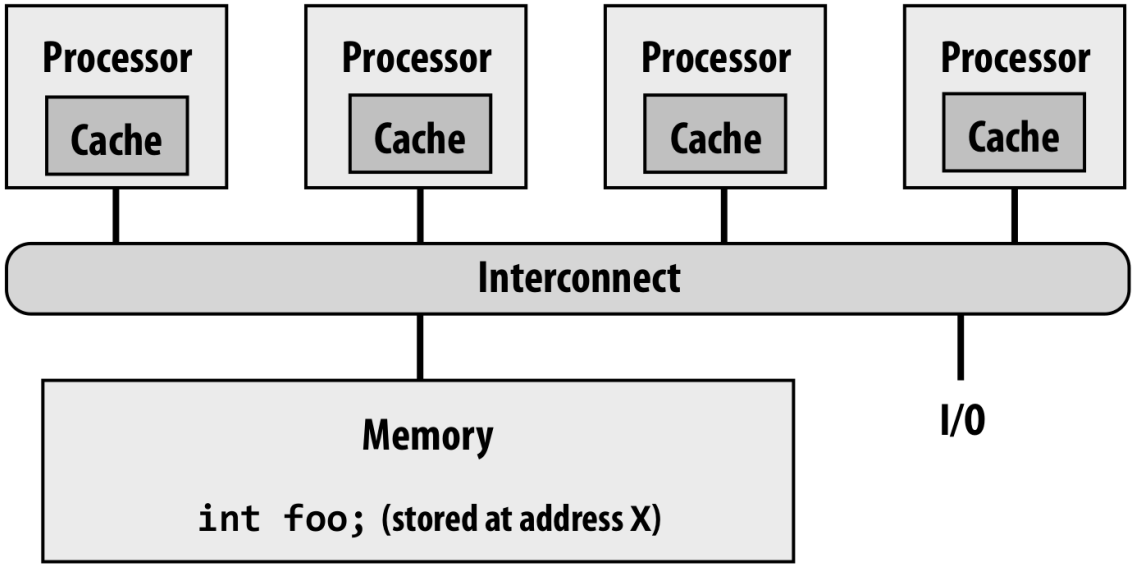

The problem with caches... (2)

- ***Also exists in single-processor systems***
  - DMA transfers between IO devices and memory
  - Both the device and the processor could read **stale** data
- ***Usual solution***
  - Buffer memory stored in an uncached physical page
  - Force cache flush after completing work on buffer contents

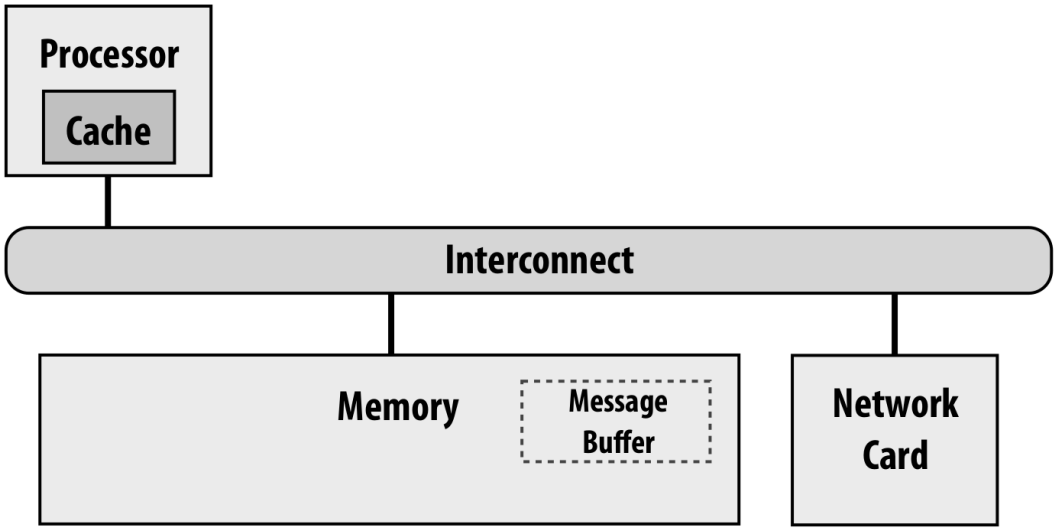

The cache coherence problem

- **Reading from memory address X should return the last value written to address X by any processor**
  - Intuitive expectation for a shared memory system
  - Problem with multiple clients
    - Single-processor system with DMA transfers
    - Multi-processor systems
- **Cause: presence of local and global state**
  - Multiple local states in processor caches
  - Global state in main memory

Problems with the intuitive expectation

- **Not well defined for a multi-processor system**
  - Reading from memory address always returns **the last value** written to that address by **any processor**
- **What does "the last" mean?**
  - What if two processors write at the same time?
  - What if a write by P1 followed by a read from P2 are so close (in time) that it's impossible to communicate the occurrence of the read to other processors?
- **In sequential programs, "last" is determined by program order (not time)**
  - Also holds within a thread of a parallel program.
  - Inadequate for multiple parallel threads.

Coherent shared memory system

- **Processor observes its *own writes* in *program order***
  - Intuitive requirement for single-processor systems
  - A read from address X by processor P that follows a write to address X by processor P returns the value written by P
    - Assuming no other processor wrote to X in between
- **Writes to memory *eventually* observed by *all processors***
  - A read from address X by processor P that follows a write to address X by processor Q returns the value written by Q if the read and write are ***sufficiently separated in time***
    - Assuming no other processor wrote to X in between
  - Does not define **when** the news of a write is propagated.
- **Writes to the *same location* are *serialized* (ordered)**
  - Two writes to the **same location** by any two processors are observed in the same order by all processors.

Write serialization (ordering)

- **Writes to the *same location* are *serialized* (ordered)**
  - Two writes to the same location by any two processors must be observed in the same order by all processors.
- ***Example***
  - P1 writes value **a** to **X**. Then P2 writes value **b** to **X**.
  - Consider the following situation
    - P1 first observes write of **a** to **X** and then the write of **b** to **X**
    - P2 first observes write of **b** do **X** and then the write of **a** to **X**
  - There is no global ordering of loads and stores to X that would produce the results of such a parallel program
    - For a coherent system, a global ordering must exist that is consistent with the result of program execution

Coherence vs. consistency

- ***Coherence***
  - Defines read/write behavior with respect to the same memory location
- ***Consistency***
  - Defines read/write behavior with respect to different locations
  - Deals with the ***when*** of write propagation
- ***For our purposes***
  - If a processor writes to address X and then to address Y, then any processor that observes the result of the write to Y also observes the result of write to X.

Implementing coherence

- ***Hardware solutions***
  - HW ensures that a read from a memory location by any processor returns the last value written to that place
    - For a suitable/reasonable definition of “last”
  - Metadata keeps information about data in cache with respect to others
  - Solutions: *invalidating* or *updating* data in cache
    - Coherence protocol: rules for updating the metadata of a particular cache line (block) in the whole system

Simple solution: shared cache

- **Issues with scaling**
  - Interference, contention
- **Potential advantages**
  - Fine sharing granularity (overlap of working sets)
  - Actions by one processor may prefetch data for others

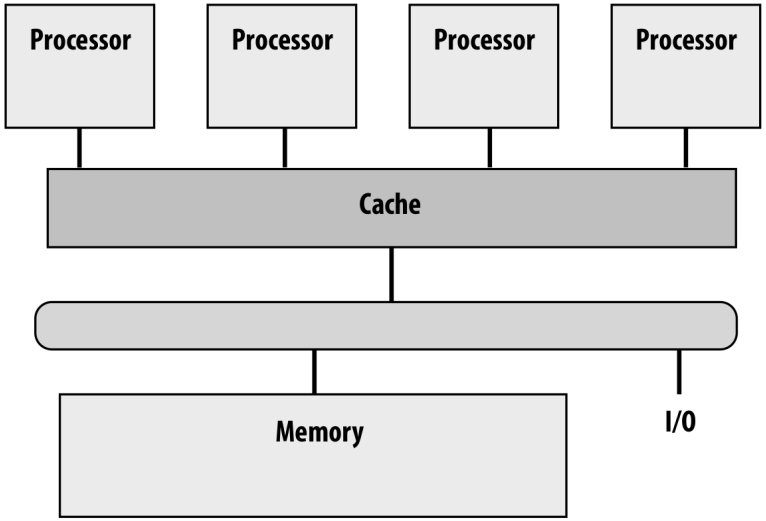

Solutions based on snooping

- **Processors (cache controllers) on shared interconnect**
  - All events related to coherence **broadcast** to all processors (cache controllers) in the system.
- **Cache controllers snoop on (monitor) all memory operations**
  - Each (individually) reacting so as to ensure coherency
  - Must react to events from both the processor side (data path) and the interconnect side (activity of other processors)

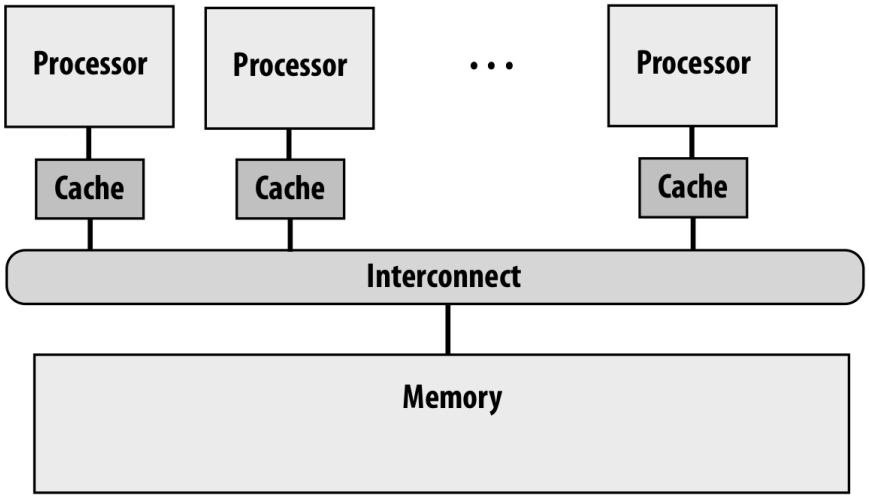

Simple coherence implementation

- ***Write-through cache***
  - Coherence granularity: one cache line
- ***Invalidates a cache line in other processors on write***
  - Broadcast write to a cache line on the shared interconnect
    - Other processors invalidate the cache line in their local caches
  - Next read of that cache line by other processors will result in a cache miss
  - The other processors are forced to retrieve the updated value from memory

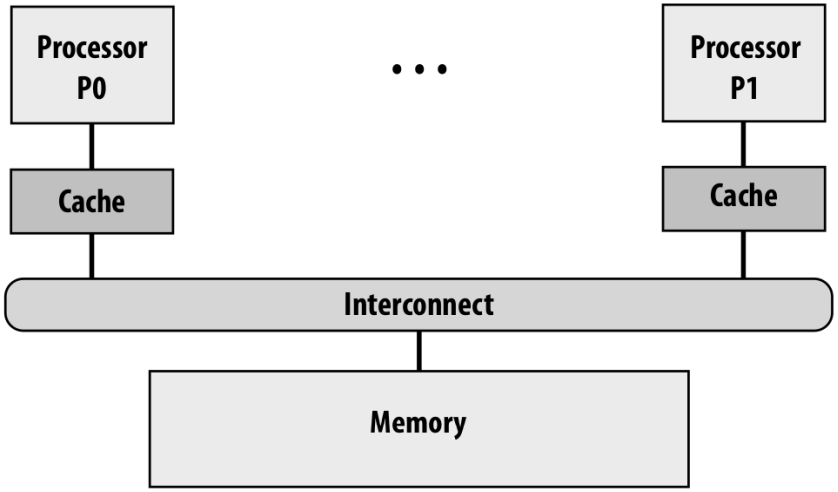

Basic Valid/Invalid (VI) protocol

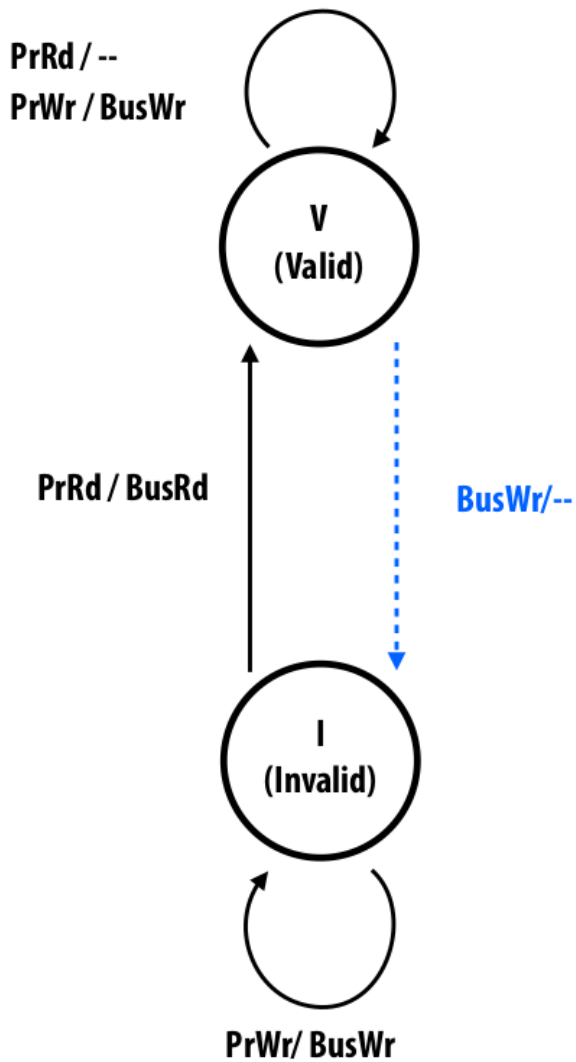

- ***A/B = action A observed, action B taken***
  - Bus (interconnect) initiated transaction
  - Processor initiated transaction
- ***Protocol actions***
  - Processor Read (PrRd)
  - Processor Write (PrWr)
  - Bus Read (BusRd)
  - Bus Write (BusWr)
- ***Interconnect requirements***
  - All write transactions visible to all cache controllers in the same order
- ***Simplifying assumptions***
  - Write-through cache with *write no-allocate* policy
  - Interconnect and memory transactions are atomic
  - Processor waits until previous memory operation is complete before issuing next memory operation
  - Invalidation applied immediately as a part of receiving the invalidation broadcast

Write-through policy is inefficient

- ***Every write propagated to memory***
  - Very high bandwidth requirements
- ***Write-back cache absorb most writes***
  - Significantly reduces bandwidth requirements
  - How to ensure write propagation/serialization?
  - Requires a more sophisticated protocol

Invalidation protocol for write-back cache

- **Cache line in exclusive state can be modified without notifying the other caches**
  - Other caches don't have the cache line, therefore other processors cannot read data from it without issuing a memory read request
- **Writes only possible to cache lines in exclusive state**
  - If a processors wants to write to a cache line that is not in exclusive state, the cache controller first broadcasts a read-exclusive transaction
    - Tells the other caches about an impending write
  - Note: read-exclusive broadcast is also required for cache lines already present in cache (to upgrade their state)
  - Dirty cache line is necessarily exclusive
- ***When cache controller snoops a read-exclusive request...***
  - If it concerns a cache line it contains, it must invalidate it

Basic MSI invalidation protocol

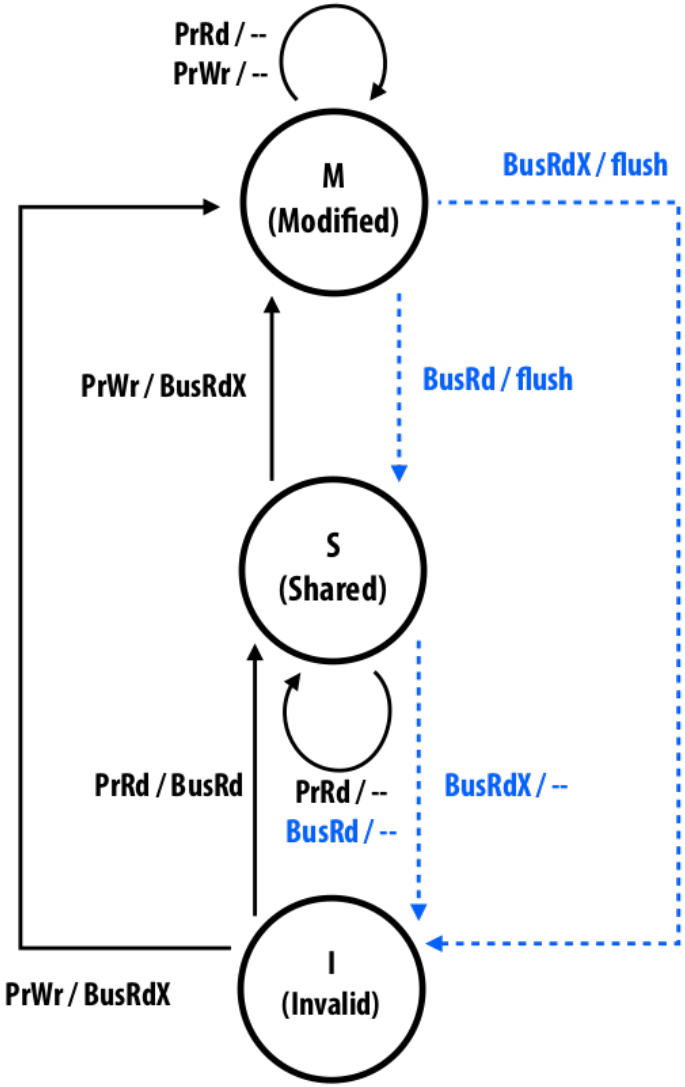

- ***Key tasks***
  - Obtain exclusive access for write
  - Locate the most recent value on cache miss
- ***Protocol states***
  - I: invalid cache line
  - S: clean cache line in one or more caches
  - M: dirty cache line in exactly one cache (dirty or exclusive state)
- ***Protocol actions***
  - Processor Read (PrRd)
  - Processor Write (PrWr)
  - Bus Read (BusRd)
    - Read cache line with no intent to modify
  - Bus Read Exclusive (BusRdX)
    - Read cache line with intent to modify
  - Bus Write Back (flush)
    - Write cache line out to memomry

Does MSI satisfy coherence requirements?

- ***Write propagation***
  - Through invalidation.
- ***Write ordering***
  - Writes that appear on the bus are ordered by the order they appear on the bus (BusRdX)
  - Reads that appear on the bus are ordered by the order they appear on the bus (BusRd)
  - Writes that don't appear on the bus (cache line already in M state)
    - Sequence of writes to line comes between two bus transactions for the line.
    - All writes in sequence performed by the same processor P (that observes them in the correct order)
    - All other processors will observe the writes to the cache line after a bus transaction for the line. All the writes will come before the transaction.
    - All processors observe writes in the same order

MESI invalidation protocol

- **MSI requires 2 transactions for common case of reading and then modifying data**
  - 1. transaction: BusRd to move from I state to S state.
  - 2. transaction: BusRdX to move from S state to M state.
- **Even when a cache line is never shared**
- **Solution: new state E (exclusive clean)**
  - Cache line is not modified, but exists in exactly one cache
  - Decouples exclusivity from cache line ownership (cache line not dirty, therefore copy in memory is a valid copy)
  - Upgrade from E to M does not require a bus transaction

MESI invalidation protocol (2)

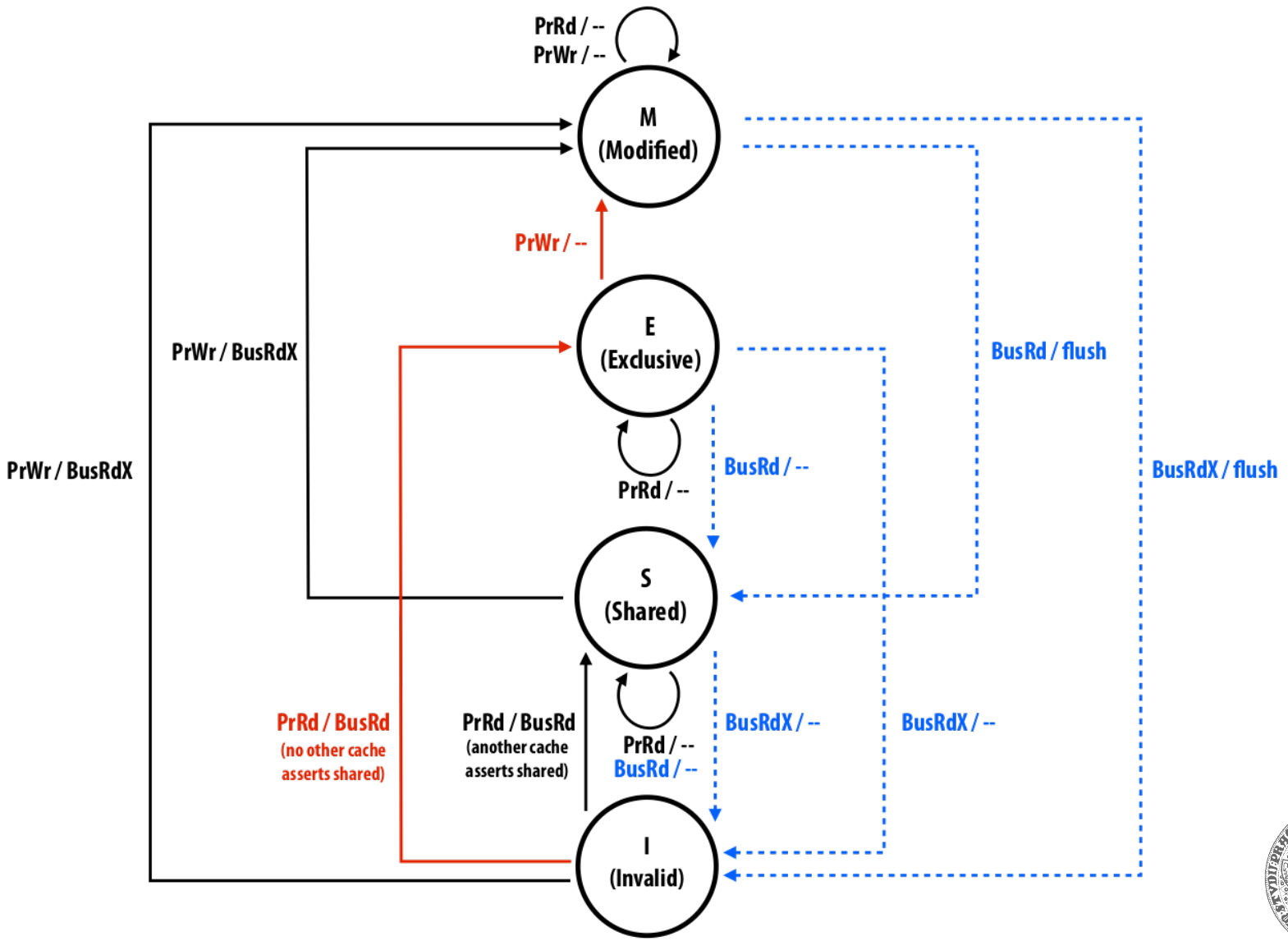

More efficient (and complex) protocols

- ***MOESI (AMD Opteron)***
  - Downgrade from M to S in MESI requires a memory write
  - MOESI adds O state (owned, not exclusive) without memory write (cache line remains dirty)
  - Other processors can have a cache line in S state, exactly one processor has a cache line in state O
  - Data in memory are stale, cache controller with a cache line in O state needs to service cache misses for other processors
- ***MESIF (Intel)***
  - Like MESI, but one cache keeps a shared cache line in F state (forward)
    instead of S
  - Cache with a cache line in F state services cache miss
  - Cache that was the last to read a cache line keeps the line in F state
    - The F state migrates to the last cache that read it after a read miss
    - It is assumed that the cache does not drop the cache line immediately (so that F state is not lost)
  - Simplifies the decision about who services a cache miss

Consequences of implementing coherence

- ***Each cache must snoop and react on coherence events broadcast on shared interconnect***
  - Necessary to duplicate cache tags so that looking up a tag does not interfere with load/store requests from the processor
- ***Higher utilization of shared interconnect***
  - Can be significant/limiting for high number of cores
- ***Some CPUs don't implement coherency at all, or only in a limited form***
  - Overhead is too high, less applicable in graphic applications

Consequences for a programmer

- ***Is there a performance problem?***

```
// per-thread event counters
int per_thread_counters [NUM_THREADS];

void thread_worker(int worker_id) {
    for (int i = 0; i < 1000; i++) {
        // ... do some work ...
        per_thread_counters[worker_id]++;
    }
}
```

Consequences for a programmer (2)

- ***Coded with "mechanical sympathy"***

```
struct PaddedCounter {
    int counter;
    char padding [CACHE_LINE_SIZE - sizeof (int)];
};

// per-thread event counters
PaddedCounter per_thread_counters [NUM_THREADS];

void thread_worker(int worker_id) {
    for (int i = 0; i < 1000; i++) {
        // ... do some work ...
        per_thread_counters[worker_id].counter++;
    }
}
```

False sharing

- ***Two threads write to different variables in the same cache line***
  - Cache line jumps between caches of writing processors
  - Coherence protocol causes intensive communication between caches even though the threads don't communicate (and don't synchronize) at all
  - All communication an unwanted product of false sharing
- ***Can significantly impact program performance on architectures implementing coherency***
  - Most commonly available processors
  - Regardless of the programming language